POWER TEC

92468
92471

Safety First. Be Protected.

5 018341 924683 >

5 018341 924713 >

www.power-tec.co.uk

TOOL CONNECTION
The Complete Connection

Distributed by The Tool Connection Ltd

Kineton Road, Southam, Warwickshire CV47 0DR
T +44 (0) 1926 815000 **F** +44 (0) 1926 815888
info@toolconnection.co.uk **www.toolconnection.co.uk**

Guarantee

If this product fails through faulty materials or workmanship, contact our service department direct on: **+44 (0) 1926 818186**. Normal wear and tear are excluded as are consumable items and abuse.

POWER TEC

92468
92471

Parking Sensor Replacement Kits

The two kits are designed for the operator to either replace defective PDC (Park Distance Control) sensors and fittings or to fit new, for example, when fitting a new replacement bumper panel after accident damage. Both kits include hole punches, location drifts and assembly clamps (refer to components diagrams below for specifications of each kit).

www.power-tec.co.uk

92468
92471

Parking Sensor Replacement Kits

Precautions

- Refer to the manufacturer's documentation and PDC fitting instructions to determine the exact size and location of the hole for the PDC to be fitted.
- Be aware that the nature of the bumper material and the hole punching method means that (for example) the Ø18.2mm punch results in a 17.8mm hole (nominal).
- If the vehicle has been lowered or fitted with sports suspension, etc, check that there is sufficient clearance behind the bumper panel for the PDC units.
- Be aware that facelift models may have to PDC units fitted in different locations; again, refer to the manufacturer's documentation for the location of the holes to be punched out (some bumper panels have location markings on the inner surface).

Components

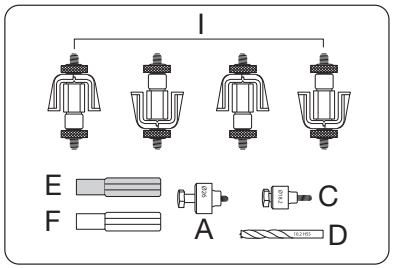

Figure 1A

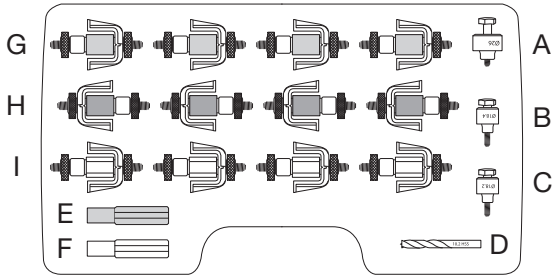

Figure 1

Reference	Description
A	Screw operated hole punch Ø26mm
B	Screw operated hole punch Ø18.4mm
C	Screw operated hole punch Ø18.2mm
D	HSS Drill bit Ø10.2mm
E	Centring drift Ø17.8mm (red anodised)
F	Centring drift Ø18.2mm
G	Assembly clamp 18.4mm (green anodised)
H	Assembly clamp 18.0mm (blue anodised)
I	Assembly clamp 18.2mm (deep)

6. If the PDC bracket is attached to the rear surface of the bumper panel by double-sided adhesive tape, then follow the manufacturer's instructions regarding cleaning and preparation of the surface, then centre the bracket to the hole using one of the centring drifts (E or F).
7. If the PDC bracket is to be secured by adhesive, or plastic welded or stapled, then use one of the assembly clamps (G, H or I) to centre and secure the PDC bracket. This will maintain the PDC bracket in position while the adhesive sets or the plastic welding or stapling operation is carried out (Figure 6).

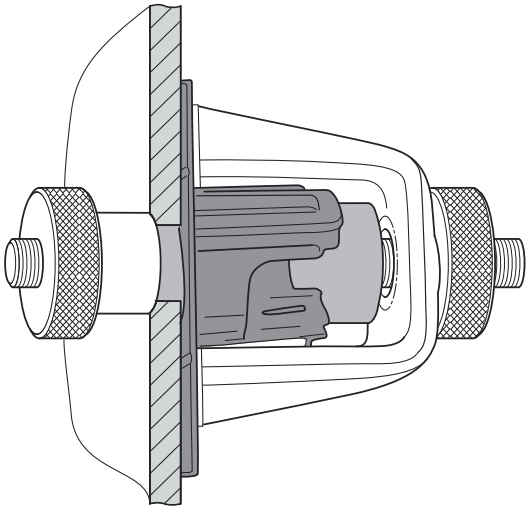

Figure 6

Our products are designed to be used correctly and with care for the purpose for which they are intended. No liability is accepted by Power-TEC for incorrect use of any of our products, and Power-TEC cannot be held responsible for any damage to personnel, property or equipment when using the tools. Incorrect use will also invalidate the warranty.

Instructions

1. Refer to the manufacturer's documentation and PDC fitting instructions to determine the locations and exact size of the hole for the PDCs to be fitted (some bumper panels have location markings on the inner surface).
2. Drill pilot hole: refer to Figure 2: use the supplied Ø10.2mm drill bit (D) to drill through the centre of the marked location position. Wear eye protection when drilling.

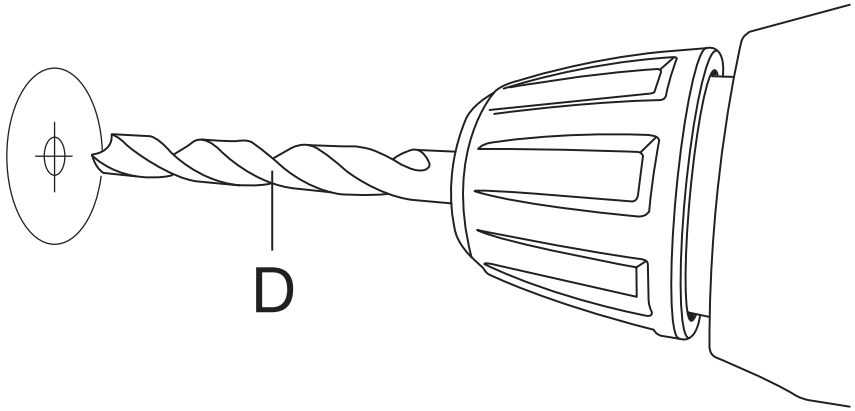

Figure 2

3. Choose the correct screw operated hole punch (A, B or C) for the specified hole size then refer to Figure 3 and assemble hole punch through the previously drilled pilot hole in the bumper panel.

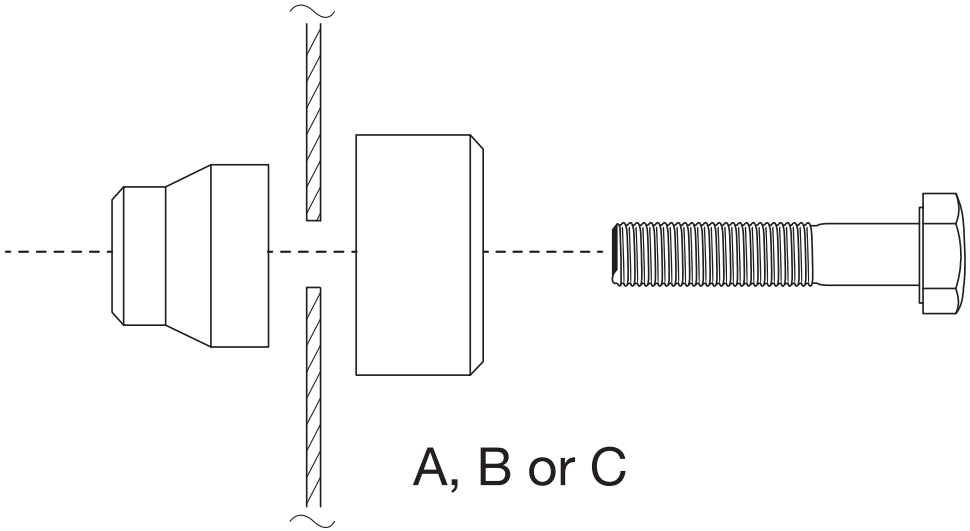

Figure 3

4. Refer to Figure 4: use a 17mm socket or spanner and tighten screw nut clockwise to force the hole punch through the bumper panel material.

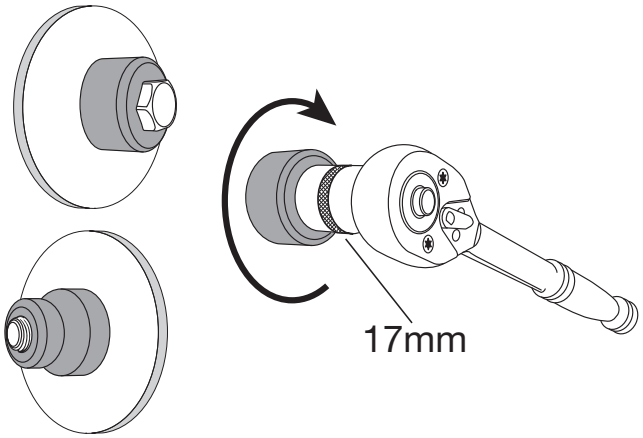

Figure 4

5. When the hole punch breaks through the material it will move freely. Withdraw the hole punch from the bumper panel (Figure 5), leaving a cleanly cut hole.

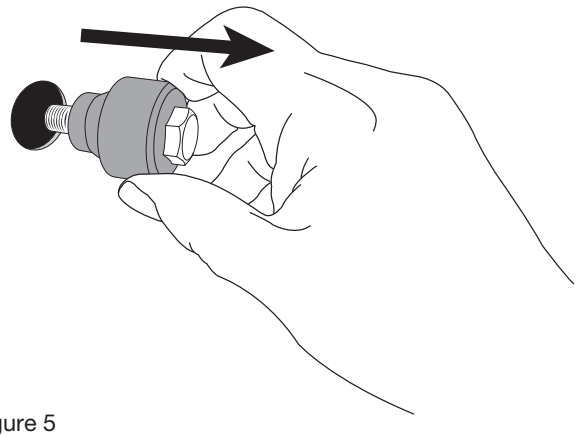

Figure 5